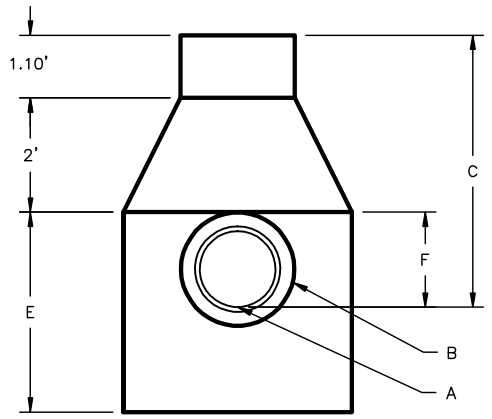

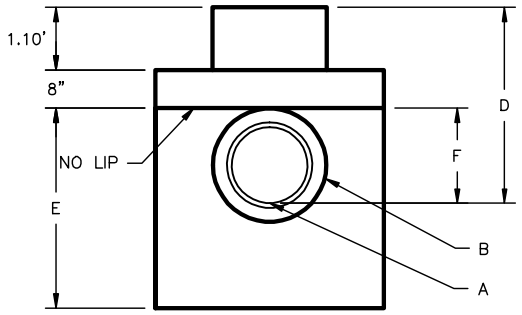

RCP PIPE DIA.	HOLE DIA.	RIM TO INV. FOR 2' CONE	RIM TO INV. MIN. HEIGHT (FLAT TOP W/O LIP)	RIM TO INV. MIN. HEIGHT (FLAT TOP W/ LIP)	MIN. BASE HEIGHT W/ 2' SUMP	INV. TO TOP OF HOLE	MANHOLE MIN DIA.
A	B	C	D		E	F	
27"	36"	N/A	4.46'	4.81'	4.72'	2.71'	60"
36"	42"	N/A	4.77'	5.10'	5.00'	3.00'	60"
36"	48"	N/A	5.27'	5.60'	5.50'	3.50'	60"

KERKSTRA PRECAST
Casting Your Future
3373 Busch Drive, Grandville, Michigan 49418
616.224.6176 f:616.224.2651 www.kerkstra.com
pci CERTIFIED PLANT

ENG:
PLANT:
FIELD:
PRES:

MANHOLE HEIGHT FIGURES
FOR 60" DIA. STRUCTURES

DATE: 7/2/07

FILE NAME: 7261