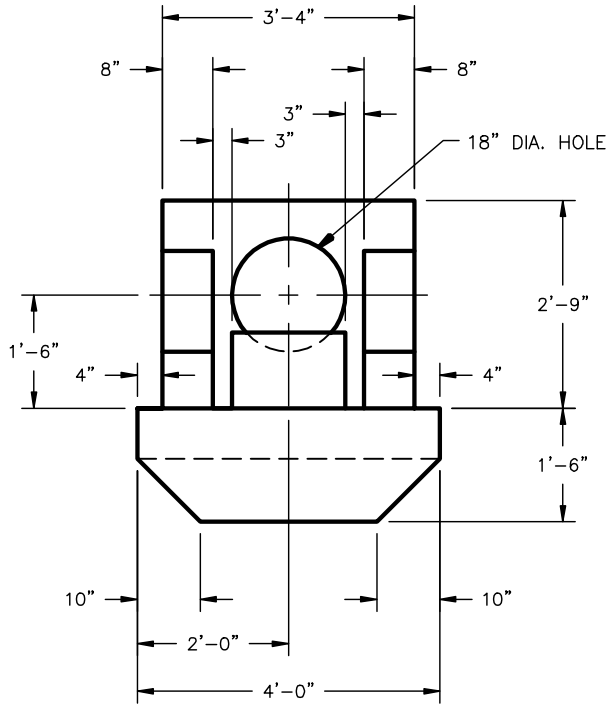

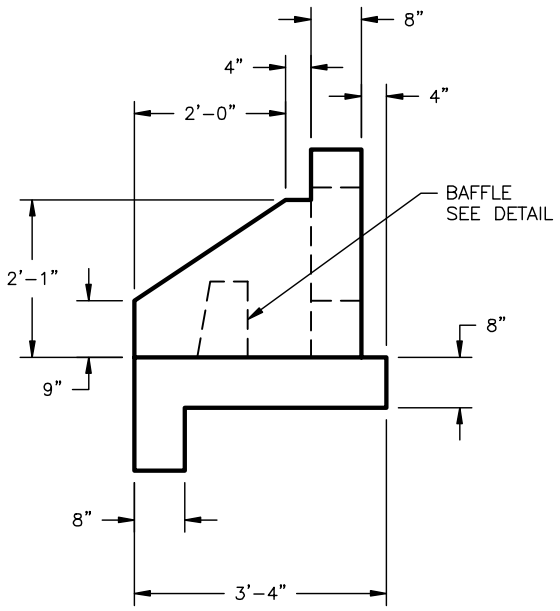

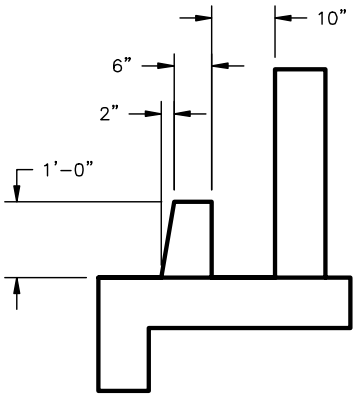

BAFFLE DETAIL

MDOT STANDARD
REBAR PATTERN PER MDOT STANDARDS

KERKSTRA PRECAST
Casting Your Future
3373 Busch Drive, Grandville, Michigan 49418
616.224.6176 f:616.224.2651 www.kerkstra.com
pci CERTIFIED PLANT

ENG:	PRECAST CONCRETE OUTLET HEADWALL FOR 12" RCP	
PLANT:		
FIELD:		
PRES:	DATE: 7/2/07	FILE NAME: 7405